Work Order ID 59227

Friday, May 28, 2010 9:47:09 AM

Item ID: D3909-041 **Accept** **Setup Start** **Stop**

Revision ID:

Item Name: Crosstube Lug Assembly, Fwd

Start Date: 5/27/2010 **Start Qty:** 6.00 **Cust Item ID:**

Required Date: 6/4/2010 **Req'd Qty:** 6.00 **Customer:**

Reference:

Approvals: **Process Plan:** M **Date:** 10-5-28 **Tooling:** _____ **Date:** _____ **Run Start** **Stop**

QC: _____ **Date:** _____ **SPC (Y/N):** _____ **Date:** _____

Sequence ID/ Work Center ID	Operation Description	Set Up/ Run Hours	Tool ID	Tool #	Plan Code	Accept Qty	Reject Qty	Reject Number	Insp. Stamp
Draw Nbr D3909	**Revision Nbr** B								
100 Packaging	Pick Kit	0.00							
Packaging	**Memo**	0.00							
110 Small Fab		0.00							
Small Fab	**Memo** 1- Assemble as per dwg Trim rivet to 1.185" long	0.00							
120 QC	QC5- Inspect part completeness to step on W/O	0.00							
Quality Control	**Memo**	0.00							

5/06/28 (6)

5/06/28 (C)

5/06/30 (10)

Dart Aerospace Ltd

W/O:		WORK ORDER CHANGES					
DATE	**STEP**	**PROCEDURE CHANGE**	**By**	**Date**	**Qty**	**Approval** Chief Eng / Prod Mgr	**Approval** QC Inspector

Part No: _____ **PAR #:** _____ **Fault Category:** _____ **NCR:** Yes No **DQA:** _____ **Date:** _____

Resolution: _____ **Disposition:** _____ **QA: N/C Closed:** _____ **Date:** _____

NCR:		WORK ORDER NON-CONFORMANCE (NCR)						
DATE	**STEP**	**Description of NC** Section A	**Corrective Action** Section B			**Verification** Section C	**Approval** Chief Eng	**Approval** QC Inspector
			Initial Chief Eng	**Action Description** Chief Eng	**Sign & Date**			

NOTE: Date & initial all entries

Work Order ID 59227

Friday, May 28, 2010 9:47:09 AM

Item ID: D3909-041 **Accept**

Revision ID:

Item Name: Crosstube Lug Assembly, Fwd

Setup **Start** **Stop**

Start Date: 5/27/2010 **Start Qty:** 6.00

Required Date: 6/4/2010 **Req'd Qty:** 6.00

Cust Item ID:

Customer:

Reference:

Run **Start** **Stop**

Approvals: **Process Plan:** _____ **Date:** _____ **Tooling:** _____ **Date:** _____

QC: _____ **Date:** _____ **SPC (Y/N):** _____ **Date:** _____

Sequence ID/ Work Center ID	Operation Description	Set Up/ Run Hours	Tool ID	Tool #	Plan Code	Accept Qty	Reject Qty	Reject Number	Insp. Stamp
130 Packaging Packaging	Identify as per dwg & Stock Location: 509	0.00							
	Memo	0.00							
140 QC Quality Control	QC21- Final Inspection - Work Order Release	0.00							
	Memo	0.00							

10/6/30 (6)

10/07

MF

10-6-30

Dart Aerospace Ltd

W/O:		WORK ORDER CHANGES					
DATE	**STEP**	**PROCEDURE CHANGE**	**By**	**Date**	**Qty**	**Approval** Chief Eng / Prod Mgr	**Approval** QC Inspector

Part No: _____ **PAR #:** _____ **Fault Category:** _____ **NCR:** Yes No **DQA:** _____ **Date:** _____

Resolution: _____ **Disposition:** _____ **QA: N/C Closed:** _____ **Date:** _____

NCR:		WORK ORDER NON-CONFORMANCE (NCR)						
DATE	**STEP**	**Description of NC** Section A	**Corrective Action** Section B			**Verification** Section C	**Approval** Chief Eng	**Approval** QC Inspector
			Initial Chief Eng	**Action Description** Chief Eng	**Sign & Date**			

NOTE: Date & initial all entries

Picklist Print

Friday, May 28, 2010 9:47:13 AM

Work Order ID: 59227

Parent Item: D3909-041

Parent Item Name: Crosstube Lug Assembly, Fwd

Comments: IPP RevA: New issue DD verified by:EC
per dwg revB DD 10.04.20 verified by:EC
IPP Rev:B as

Start Date: 5/27/2010
Start Qty: 6.00

Required Date: 6/4/2010
Required Qty: 6.00

Component Item ID/ Item Name	Replacement Item ID	Mfg/ Purch	Bin Item	Primary Location	Last Location	Route Seq ID	Unit of Measure	Qty on Hand	Qty per Kit	Total Qty	Qty Issued	Date Issued	Status
D2690-6		Manufactured	No			100	Each	18.0000	1	6	6	10/06/28	
Lanyard Assembly													
				Location			**Loc Qty**		**Loc Code**				
				ST021			18						
					58375		18						
D3909-1		Manufactured	No			100	Each	10.0000	2	12	6	10/06/28	
Lug Plate, Fwd Crosstube												B59155 (6)	
				Location			**Loc Qty**		**Loc Code**				
				ST095			10						
					57824		8						
					58339		2						
D3909-3		Manufactured	No			100	Each	2.0000	1	6	4	10/06/28	
Fwd Lower Attach Arm												B58209 (4)	
				Location			**Loc Qty**		**Loc Code**				
				ST094			2						
					58340		2						
D3909-5 ✓		Manufactured	No			100	Each	1.0000	1	6	2	10/06/28	
Eyebolt Stud												B59855 (2)	
				Location			**Loc Qty**		**Loc Code**				
				ST095			1						
					58240		1						

Dart Aerospace Ltd

W/O:		WORK ORDER CHANGES					
DATE	**STEP**	**PROCEDURE CHANGE**	**By**	**Date**	**Qty**	**Approval** Chief Eng / Prod Mgr	**Approval** QC Inspector

Part No: _____ **PAR #:** _____ **Fault Category:** _____ **NCR:** Yes No **DQA:** _____ **Date:** _____

Resolution: _____ **Disposition:** _____ **QA: N/C Closed:** _____ **Date:** _____

NCR:		WORK ORDER NON-CONFORMANCE (NCR)						
DATE	**STEP**	**Description of NC** Section A	**Corrective Action** Section B			**Verification** Section C	**Approval** Chief Eng	**Approval** QC Inspector
			Initial Chief Eng	**Action Description** Chief Eng	**Sign & Date**			

NOTE: Date & initial all entries

Picklist Print

Friday, May 28, 2010 9:47:13 AM

Work Order ID: 59227

Parent Item: D3909-041

Parent Item Name: Crosstube Lug Assembly, Fwd

Comments: IPP RevA: New issue DD verified by:EC
per dwg revB DD 10.04.20 verified by:EC
IPP Rev:B as

Start Date: 5/27/2010
Start Qty: 6.00

Required Date: 6/4/2010
Required Qty: 6.00

Component Item ID/ Item Name	Replacement Item ID	Mfg/ Purch	Bin Item	Primary Location	Last Location	Route Seq ID	Unit of Measure	Qty on Hand	Qty per Kit	Total Qty	Qty Issued	Date Issued	Status
D3910-1		Manufactured	No			100	Each	13.0000	2	12			
Crosstube Lug													
				Location			**Loc Qty**		**Loc Code**				
				st507			13						
					58341		13			12			
D3917-1		Manufactured	No			100	Each	50.0000	2	12			
Washer													
				Location			**Loc Qty**		**Loc Code**				
				ST065			40						
					57821		40						
				ST096			10						
					57830		10			10			
AN3C12A		Purchased	No			100	Each	130.0000	4	24			
Bolts													
				Location			**Loc Qty**		**Loc Code**				
				ST351			130						
					112314		80			24			
					114761		50						
AN3C13		Purchased	No			100	Each	76.0000	1	6			
Bolt													
				Location			**Loc Qty**		**Loc Code**				
				ST351			76						
					114304		26			6			
					114714		50						

B60170 (24)

Dart Aerospace Ltd

W/O:		WORK ORDER CHANGES					
DATE	**STEP**	**PROCEDURE CHANGE**	**By**	**Date**	**Qty**	**Approval** Chief Eng / Prod Mgr	**Approval** QC Inspector

Part No: _____ **PAR #:** _____ **Fault Category:** _____ **NCR:** Yes No **DQA:** _____ **Date:** _____

Resolution: _____ **Disposition:** _____ **QA: N/C Closed:** _____ **Date:** _____

NCR:		WORK ORDER NON-CONFORMANCE (NCR)						
DATE	**STEP**	**Description of NC** Section A	**Corrective Action** Section B			**Verification** Section C	**Approval** Chief Eng	**Approval** QC Inspector
			Initial Chief Eng	**Action Description** Chief Eng	**Sign & Date**			

NOTE: Date & initial all entries

Picklist Print

Friday, May 28, 2010 9:47:13 AM

Work Order ID: 59227

Parent Item: D3909-041

Parent Item Name: Crosstube Lug Assembly, Fwd

Comments: IPP RevA: New issue DD verified by:EC
per dwg revB DD 10.04.20 verified by:EC
IPP Rev:B as

Start Date: 5/27/2010
Start Qty: 6.00

Required Date: 6/4/2010
Required Qty: 6.00

Component Item ID/ Item Name	Replacement Item ID	Mfg/ Purch	Bin Item	Primary Location	Last Location	Route Seq ID	Unit of Measure	Qty on Hand	Qty per Kit	Total Qty	Qty Issued	Date Issued	Status
MS17984-C413		Purchased	No			100	Each	21.0000	1	6			
PIN, QUICK RELEASE													

Location	Loc Qty	Loc Code
ST297	4	
114340	4	
ST314	17	
114523	1	
114774	16	

4M18 M1145906 (18)

MS20615-4M20		Purchased	No			100	Each	73.0000	3	18			
RIVET													

Location	Loc Qty	Loc Code
ST323	73	
113254	7	
114324	4	
114349	62	

AN310C3		Purchased	No			100	Each	76.0000	1	6			
Castellated Nut													

Location	Loc Qty	Loc Code
ST349	76	
114304	26	
114714	50	

Dart Aerospace Ltd

W/O:		WORK ORDER CHANGES					
DATE	**STEP**	**PROCEDURE CHANGE**	**By**	**Date**	**Qty**	**Approval** Chief Eng / Prod Mgr	**Approval** QC Inspector

Part No: _____ **PAR #:** _____ **Fault Category:** _____ **NCR:** Yes No **DQA:** _____ **Date:** _____

Resolution: _____ **Disposition:** _____ **QA: N/C Closed:** _____ **Date:** _____

NCR:		WORK ORDER NON-CONFORMANCE (NCR)						
DATE	**STEP**	**Description of NC** Section A	**Corrective Action** Section B			**Verification** Section C	**Approval** Chief Eng	**Approval** QC Inspector
			Initial Chief Eng	**Action Description** Chief Eng	**Sign & Date**			

NOTE: Date & initial all entries

Picklist Print

Friday, May 28, 2010 9:47:13 AM

Work Order ID: 59227

Parent Item: D3909-041

Parent Item Name: Crosstube Lug Assembly, Fwd

Comments: IPP RevA: New issue DD verified by:EC
per dwg revB DD 10.04.20 verified by:EC
IPP Rev:B as

Start Date: 5/27/2010
Start Qty: 6.00

Required Date: 6/4/2010
Required Qty: 6.00

Component Item ID / Item Name	Replacement Item ID	Mfg/ Purch	Bin Item	Primary Location	Last Location	Route Seq ID	Unit of Measure	Qty on Hand	Qty per Kit	Total Qty	Qty Issued	Date Issued	Status
MS21043-3		Purchased	No			100	Each	3,463.000	4	24			
Nut													

Location		Loc Qty	Loc Code
FG		80	
	103691	80	
ST301		3383	
	112314	3383	

MS24665-151		Purchased	No			100	Each	662.0000	1	6			
Cotter Pin													

Location		Loc Qty	Loc Code
ST309		662	
	17566	662	

NAS1149C0332R		Purchased	No			100	Each	1,694.000	8	48			
Washer													

Location		Loc Qty	Loc Code
ST297		1694	
	113524	10	
	113737	150	
	114341	1534	

Dart Aerospace Ltd

W/O:		WORK ORDER CHANGES					
DATE	**STEP**	**PROCEDURE CHANGE**	**By**	**Date**	**Qty**	**Approval** Chief Eng / Prod Mgr	**Approval** QC Inspector

Part No: _____ **PAR #:** _____ **Fault Category:** _____ **NCR:** Yes No **DQA:** _____ **Date:** _____

Resolution: _____ **Disposition:** _____ **QA: N/C Closed:** _____ **Date:** _____

NCR:		WORK ORDER NON-CONFORMANCE (NCR)						
DATE	**STEP**	**Description of NC** Section A	**Corrective Action** Section B			**Verification** Section C	**Approval** Chief Eng	**Approval** QC Inspector
			Initial Chief Eng	**Action Description** Chief Eng	**Sign & Date**			

NOTE: Date & initial all entries

Picklist Print

Friday, May 28, 2010 9:47:13 AM

Work Order ID: 59227

Parent Item: D3909-041

Parent Item Name: Crosstube Lug Assembly, Fwd

Comments: IPP RevA: New issue DD verified by:EC
per dwg revB DD 10.04.20 verified by:EC
IPP Rev:B as

Start Date: 5/27/2010
Start Qty: 6.00

Required Date: 6/4/2010
Required Qty: 6.00

Component Item ID/ Item Name	Replacement Item ID	Mfg/ Purch	Bin Item	Primary Location	Last Location	Route Seq ID	Unit of Measure	Qty on Hand	Qty per Kit	Total Qty	Qty Issued	Date Issued	Status
NAS1149C0363R		Purchased	No			100	Each	6,164.000	2	12			

Washer

Location	Loc Qty	Loc Code
ST297	6164	
113524	464	
113644	200	
113889	500	
114742	5000	

5/10/06 LB

12

Dart Aerospace Ltd

W/O:		WORK ORDER CHANGES					
DATE	**STEP**	**PROCEDURE CHANGE**	**By**	**Date**	**Qty**	**Approval** Chief Eng / Prod Mgr	**Approval** QC Inspector

Part No: _____ **PAR #:** _____ **Fault Category:** _____ **NCR:** Yes No **DQA:** _____ **Date:** _____

Resolution: _____ **Disposition:** _____ **QA: N/C Closed:** _____ **Date:** _____

NCR:		WORK ORDER NON-CONFORMANCE (NCR)						
DATE	**STEP**	**Description of NC** Section A	**Corrective Action** Section B			**Verification** Section C	**Approval** Chief Eng	**Approval** QC Inspector
			Initial Chief Eng	**Action Description** Chief Eng	**Sign & Date**			

NOTE: Date & initial all entries

ITEM	QTY -041	P/N	DESCRIPTION
	X	D3909-041	FWD X-TUBE LUG ASSY
1	1	D2690-6	LANYARD
2	2	D3909-1	FWD X-TUBE LUG PLATE
3	1	D3909-3	FWD LOWER ATTACH ARM
4	1	D3909-5	EYEBOLT STUD
5	2	D3910-1	X-TUBE LUG
6	2	D3917-1	WASHER
7	4	AN3C12A	BOLT
8	1	AN3C13	BOLT
9	1	MS17984-C413	PIP PIN
10	3	MS20615-4M20	RIVET
11	1	AN310C3	NUT - CASTELLATED
12	4	MS21043-3	NUT
13	1	MS24665-151	COTTER PIN
14	8	NAS1149C0332R	WASHER
15	2	NAS1149C0363R	WASHER

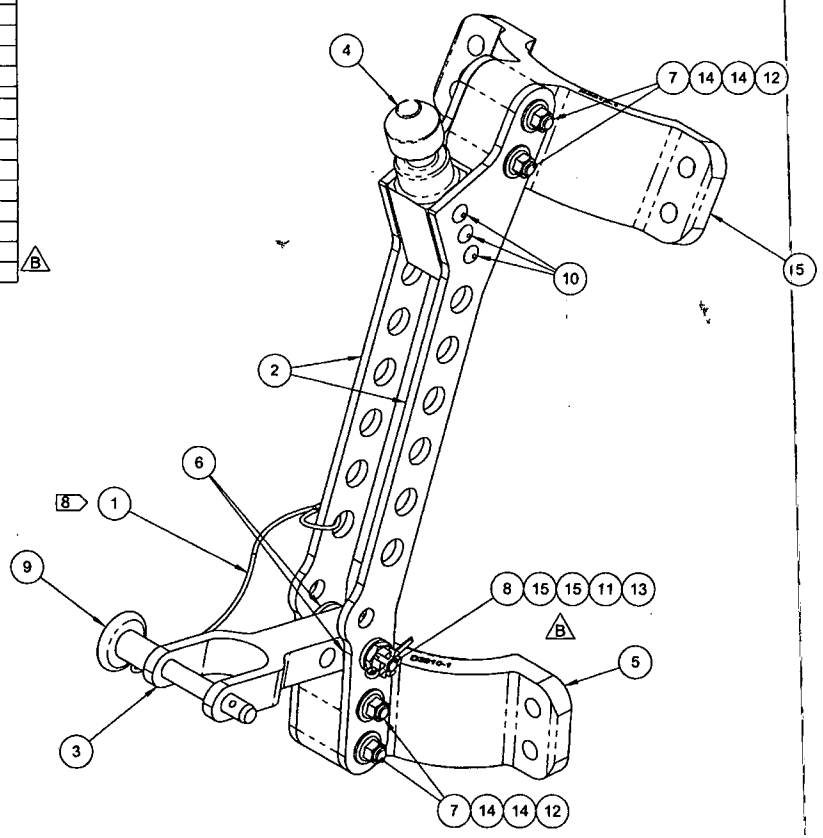

D3909-041 FWD X-TUBE LUG ASSY

SHOP COPY
RETURN TO
ENGINEERING
UNCONTROLLED COPY
SUBJECT TO AMENDMENT
WITHOUT NOTICE
WORK ORDER
NO. 59227
BS 10-5-26

RELEASED
2010-04-07
MP

NOTES:
1) MATERIAL: N/A
2) FINISH: NONE
3) TOLERANCES: PER DART QSI 018 UNLESS OTHERWISE NOTED
4) UNITS: INCHES UNLESS OTHERWISE NOTED
5) BREAK SHARP EDGES: 0.005 TO 0.010 MAX
6) IDENTIFICATION: IDENTIFY WITH DART P/N "D3909-041" USING FINE POINT PERMANENT INK MARKER
7) WEIGHT: 1.74 lbs
8) ATTACH TO D3909-1 BY LOOPING AROUND LIGHTENING HOLE FIRST AND THEN SECURE TO MS17984-C413 PIP PIN'S RING

REV.	DESCRIPTION	BY	DATE
B	BOM: ADDED ITEM 15 QTY 2 NAS1149C0363R ADDED, ITEM 14 QTY 8 WAS 10. SHT 5, D3909-5 REVISED: SECTION A-A & DIM Ø0.650 REMOVED. SIDE VIEW ADDED. DIM: 2.68 WAS 2.38 REF. 1.30 WAS 1.00, 0.250 WAS 0.220, R0.06 WAS R0.05, WEIGHT REVISED.	JPH	10.04.06
A	NEW ISSUE	JPH	10.03.04

DESIGN	JPH	DART AEROSPACE LTD	
DRAWN	JPH	HAWKESBURY, ONTARIO, CANADA	
CHECKED		DRAWING NO. D3909	REV. B
MFG. APPR.			SHEET 1 OF 5
APPROVED		TITLE FWD X-TUBE LUG ASSY	SCALE NTS
DE APPR.			
DATE	10.04.06		

COPYRIGHT © 2010 BY DART AEROSPACE LTD
THIS DOCUMENT IS PRIVATE AND CONFIDENTIAL AND IS SUPPLIED ON THE EXPRESS CONDITION THAT IT IS NOT TO BE USED FOR ANY PURPOSE OR COPIED OR COMMUNICATED TO ANY OTHER PERSON WITHOUT WRITTEN PERMISSION FROM DART AEROSPACE LTD

Dart Aerospace Ltd

W/O:		WORK ORDER CHANGES					
DATE	**STEP**	**PROCEDURE CHANGE**	**By**	**Date**	**Qty**	**Approval** Chief Eng / Prod Mgr	**Approval** QC Inspector

Part No: _____ **PAR #:** _____ **Fault Category:** _____ **NCR:** Yes No **DQA:** _____ **Date:** _____

Resolution: _____ **Disposition:** _____ **QA: N/C Closed:** _____ **Date:** _____

NCR:		WORK ORDER NON-CONFORMANCE (NCR)						
DATE	**STEP**	**Description of NC** Section A	**Corrective Action** Section B			**Verification** Section C	**Approval** Chief Eng	**Approval** QC Inspector
			Initial Chief Eng	**Action Description** Chief Eng	**Sign & Date**			

NOTE: Date & initial all entries

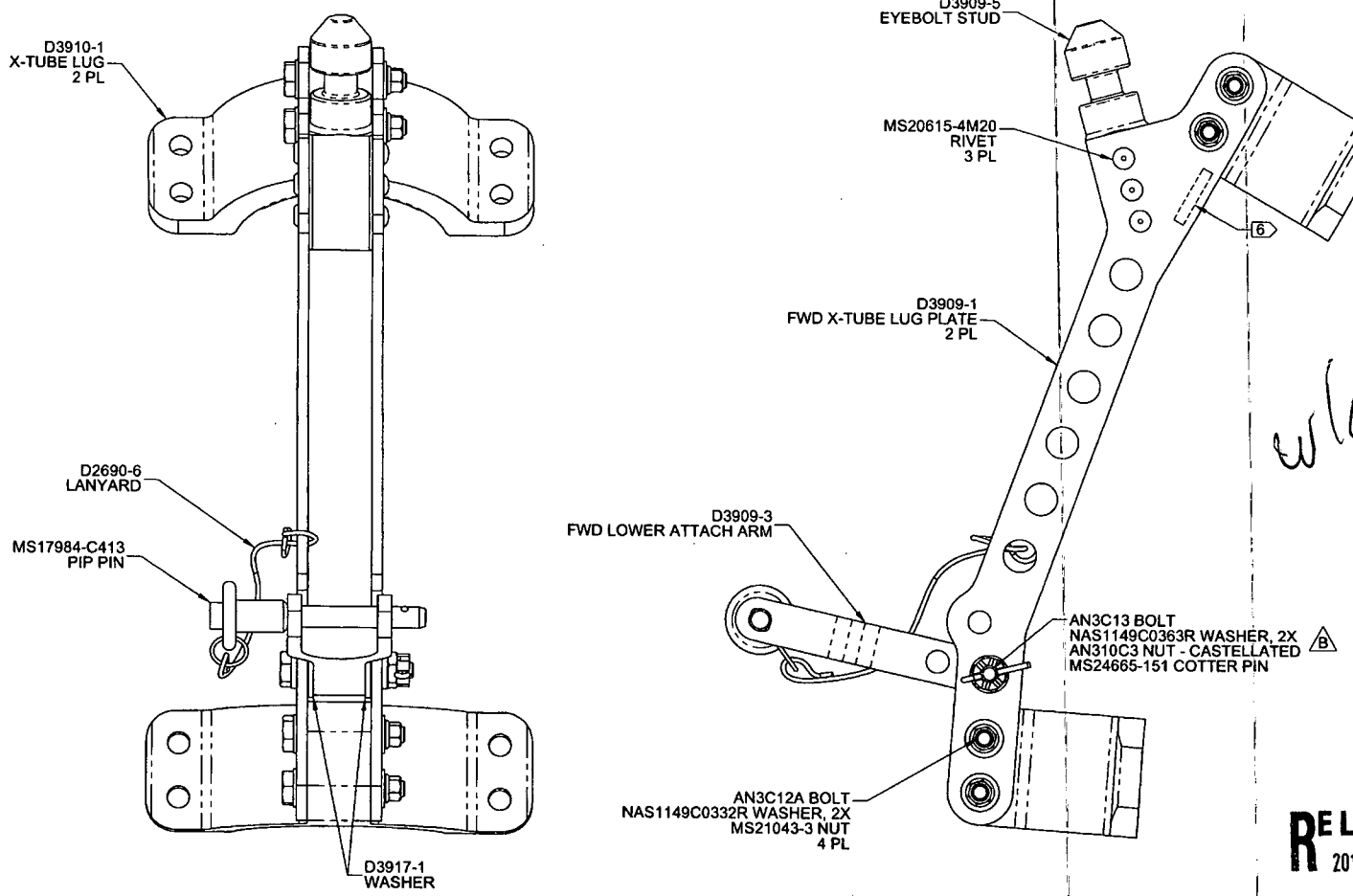

w/o 59727

RELEASED
2010 -04- 07

D3909-041 FWD X-TUBE LUG ASSY

DESIGN	JPH	DART AEROSPACE LTD HAWKESBURY, ONTARIO, CANADA	
DRAWN	JPH	DRAWING NO. D3909	REV. B
CHECKED			SHEET 2 OF 5
MFG. APPR.		TITLE FWD X-TUBE LUG ASSY	SCALE NTS
APPROVED			
DE APPR.			
DATE	10.04.06		

COPYRIGHT © 2010 BY DART AEROSPACE LTD
THIS DOCUMENT IS PRIVATE AND CONFIDENTIAL AND IS SUPPLIED ON THE EXPRESS CONDITION THAT IT IS NOT TO BE USED FOR ANY PURPOSE OR COPIED OR DISSEMINATED TO ANY OTHER PERSON WITHOUT WRITTEN PERMISSION FROM DART AEROSPACE LTD.

Dart Aerospace Ltd

W/O:		WORK ORDER CHANGES					
DATE	**STEP**	**PROCEDURE CHANGE**	**By**	**Date**	**Qty**	**Approval** Chief Eng / Prod Mgr	**Approval** QC Inspector

Part No: _____ **PAR #:** _____ **Fault Category:** _____ **NCR:** Yes No **DQA:** _____ **Date:** _____

Resolution: _____ **Disposition:** _____ **QA: N/C Closed:** _____ **Date:** _____

NCR:		WORK ORDER NON-CONFORMANCE (NCR)						
DATE	**STEP**	**Description of NC** Section A	**Corrective Action** Section B			**Verification** Section C	**Approval** Chief Eng	**Approval** QC Inspector
			Initial Chief Eng	**Action Description** Chief Eng	**Sign & Date**			

NOTE: Date & initial all entries

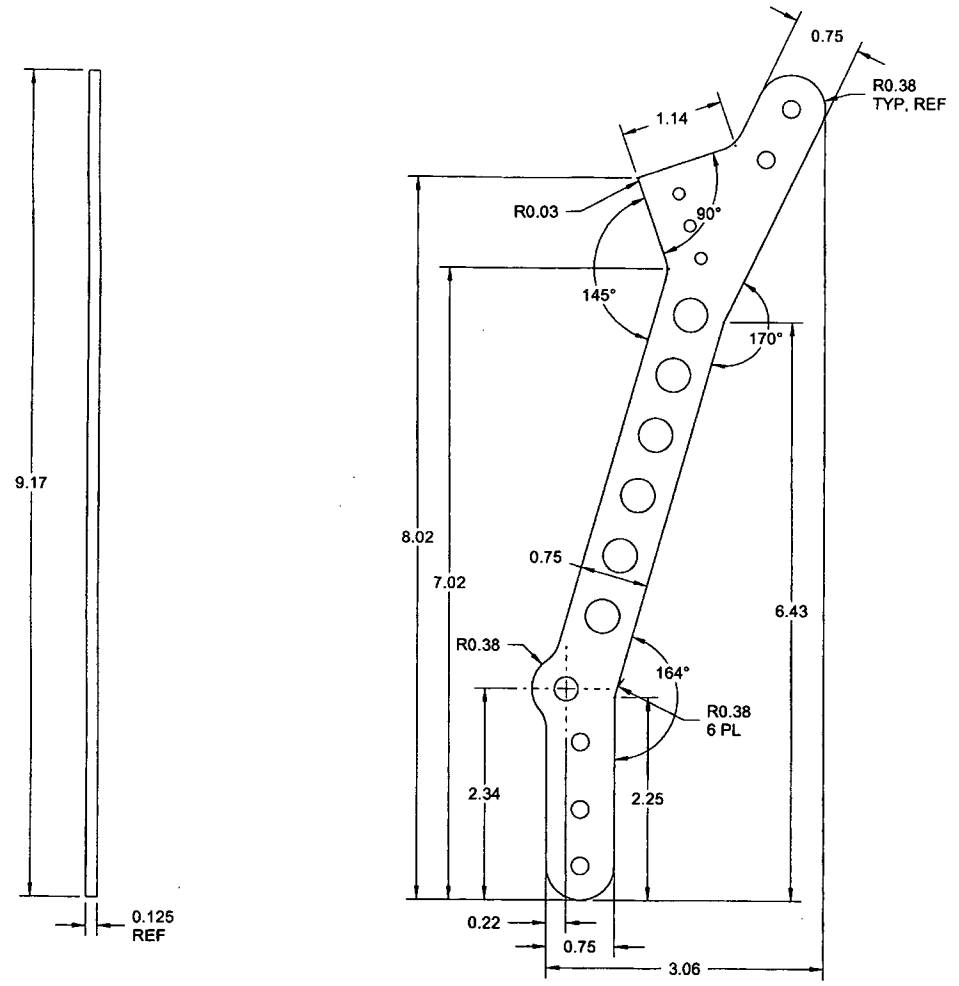

D3909-1 FWD X-TUBE LUG PLATE

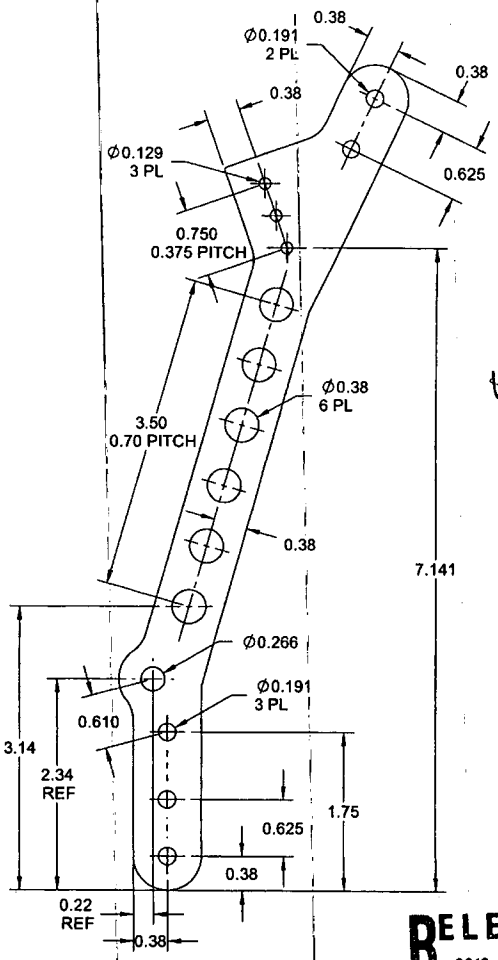

(SUPPLEMENTAL VIEW)

w059227

RELEASED
2010 -04- 07

NOTES:
1) MATERIAL: 303/304/316 STAINLESS STEEL 0.125" SHEET ANNEALED 2B,
PER MIL-S-5059 OR AMS 5513/5524 OR ASTM A240 OR ASME SA240
PER DART SPEC M303S11GA OR M304S11GA
2) FINISH: NONE
3) TOLERANCES: PER DART QSI 018 UNLESS OTHERWISE NOTED
4) UNITS: INCHES UNLESS OTHERWISE NOTED
5) BREAK SHARP EDGES: 0.005 TO 0.010 MAX
6) IDENTIFICATION: NONE
7) WEIGHT: 0.25 lbs

DESIGN	JPH
DRAWN	JPH
CHECKED	
MFG. APPR.	
APPROVED	
DE APPR.	
DATE	10.04.06

DART AEROSPACE LTD
HAWKESBURY, ONTARIO, CANADA

DRAWING NO. D3909 REV. B
SHEET 3 OF 5
TITLE FWD X-TUBE LUG ASSY
SCALE NTS

COPYRIGHT © 2010 BY DART AEROSPACE LTD
THIS DOCUMENT IS PRIVATE AND CONFIDENTIAL AND IS SUPPLIED ON THE EXPRESS CONDITION THAT IT IS NOT TO BE USED FOR ANY PURPOSE OR COPIED OR COMMUNICATED TO ANY OTHER PERSON WITHOUT WRITTEN PERMISSION FROM DART AEROSPACE LTD.

Dart Aerospace Ltd

W/O:		WORK ORDER CHANGES					
DATE	**STEP**	**PROCEDURE CHANGE**	**By**	**Date**	**Qty**	**Approval** Chief Eng / Prod Mgr	**Approval** QC Inspector

Part No: _____ **PAR #:** _____ **Fault Category:** _____ **NCR:** Yes No **DQA:** _____ **Date:** _____

Resolution: _____ **Disposition:** _____ **QA: N/C Closed:** _____ **Date:** _____

NCR:		WORK ORDER NON-CONFORMANCE (NCR)						
DATE	**STEP**	**Description of NC** Section A	**Corrective Action** Section B			**Verification** Section C	**Approval** Chief Eng	**Approval** QC Inspector
			Initial Chief Eng	**Action Description** Chief Eng	**Sign & Date**			

NOTE: Date & initial all entries

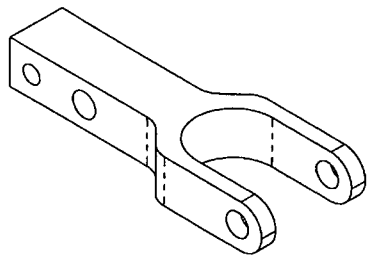

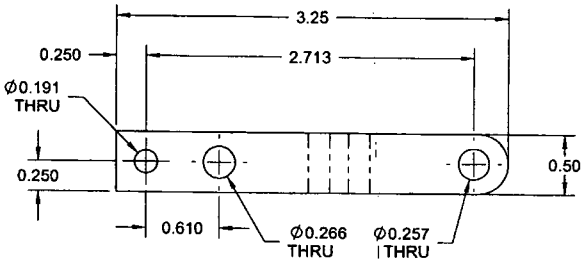

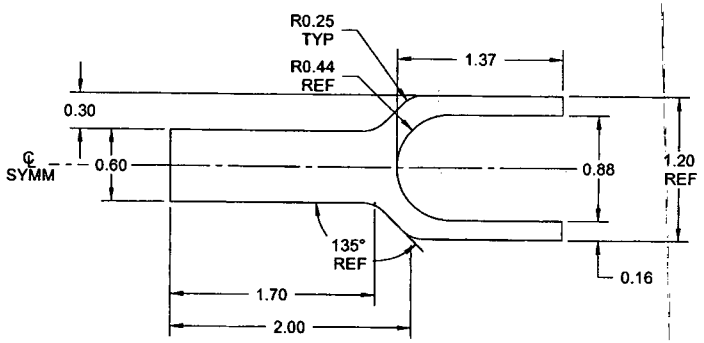

D3909-3 FWD LOWER ATTACH ARM

w/o 59227

RELEASED
2010 -04- 07

NOTES:
1) MATERIAL: 303/304/316 STAINLESS STEEL BAR, PER ASTM A276
PER DART SPEC M303B OR M304B
2) FINISH: NONE
3) TOLERANCES: PER DART QSI 018 UNLESS OTHERWISE NOTED
4) UNITS: INCHES UNLESS OTHERWISE NOTED
5) BREAK SHARP EDGES: 0.005 TO 0.010 MAX
6) IDENTIFICATION: NONE
7) WEIGHT: 0.22 lbs

DESIGN	JPH	DART AEROSPACE LTD HAWKESBURY, ONTARIO, CANADA
DRAWN	JPH	DRAWING NO. D3909 REV. B
CHECKED		SHEET 4 OF 5
MFG. APPR.		TITLE: FWD X-TUBE LUG ASSY SCALE NTS
APPROVED		
DE APPR.		
DATE	10.04.06	

COPYRIGHT © 2010 BY DART AEROSPACE LTD
THIS DOCUMENT IS PRIVATE AND CONFIDENTIAL AND IS SUPPLIED ON THE EXPRESS CONDITION THAT IT IS NOT TO BE USED FOR ANY PURPOSE OR COPIED OR COMMUNICATED TO ANY OTHER PERSON WITHOUT WRITTEN PERMISSION FROM DART AEROSPACE LTD.

Dart Aerospace Ltd

W/O:		WORK ORDER CHANGES					
DATE	**STEP**	**PROCEDURE CHANGE**	**By**	**Date**	**Qty**	**Approval** Chief Eng / Prod Mgr	**Approval** QC Inspector

Part No: _____ **PAR #:** _____ **Fault Category:** _____ **NCR:** Yes No **DQA:** _____ **Date:** _____

Resolution: _____ **Disposition:** _____ **QA: N/C Closed:** _____ **Date:** _____

NCR:		WORK ORDER NON-CONFORMANCE (NCR)						
DATE	**STEP**	**Description of NC** Section A	**Corrective Action** Section B			**Verification** Section C	**Approval** Chief Eng	**Approval** QC Inspector
			Initial Chief Eng	**Action Description** Chief Eng	**Sign & Date**			

NOTE: Date & initial all entries

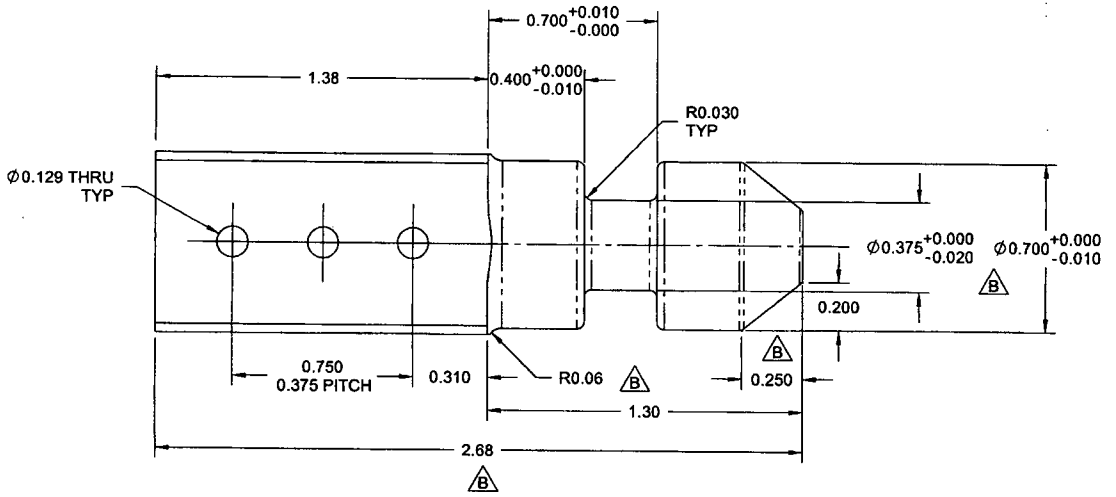

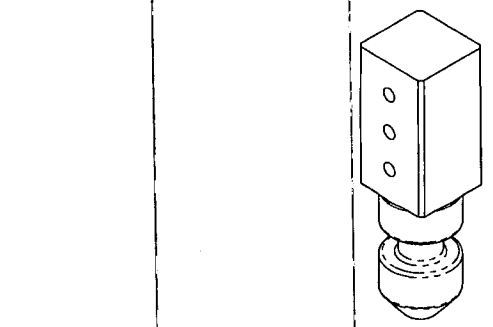

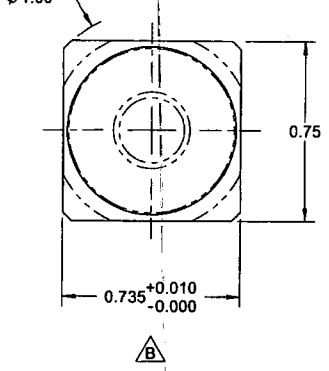

w/o 59227

D3909-5 EYEBOLT STUD

RELEASED
2010 -04- 07

NOTES:
1) MATERIAL: 303/304/316 STAINLESS STEEL ROUND BAR, PER ASTM A276
PER DART SPEC M303R OR M304R
2) FINISH: NONE
3) TOLERANCES: PER DART QSI 018 UNLESS OTHERWISE NOTED
4) UNITS: INCHES UNLESS OTHERWISE NOTED
5) BREAK SHARP EDGES: 0.005 TO 0.010 MAX
6) IDENTIFICATION: IDENTIFY WITH DART P/N "D3909-5" USING FINE POINT PERMANENT INK MARKER
B 7) WEIGHT: 0.31 lbs

DESIGN	JPH	DART AEROSPACE LTD HAWKESBURY, ONTARIO, CANADA
DRAWN	JPH	DRAWING NO. D3909 REV. B
CHECKED		SHEET 5 OF 5
MFG. APPR.		TITLE FWD X-TUBE LUG ASSY SCALE NTS
APPROVED		
DE APPR.		
DATE	10.04.06	

COPYRIGHT © 2010 BY DART AEROSPACE LTD
THIS DOCUMENT IS PRIVATE AND CONFIDENTIAL AND IS SUPPLIED ON THE EXPRESS CONDITION THAT IT IS NOT TO BE USED FOR ANY PURPOSE OR COPIED OR COMMUNICATED TO ANY OTHER PERSON WITHOUT WRITTEN PERMISSION FROM DART AEROSPACE LTD

Dart Aerospace Ltd

W/O:		WORK ORDER CHANGES					
DATE	**STEP**	**PROCEDURE CHANGE**	**By**	**Date**	**Qty**	**Approval** Chief Eng / Prod Mgr	**Approval** QC Inspector

Part No: _____ **PAR #:** _____ **Fault Category:** _____ **NCR:** Yes No **DQA:** _____ **Date:** _____

Resolution: _____ **Disposition:** _____ **QA: N/C Closed:** _____ **Date:** _____

NCR:		WORK ORDER NON-CONFORMANCE (NCR)						
DATE	**STEP**	**Description of NC** Section A	**Corrective Action** Section B			**Verification** Section C	**Approval** Chief Eng	**Approval** QC Inspector
			Initial Chief Eng	**Action Description** Chief Eng	**Sign & Date**			

NOTE: Date & initial all entries